

370150

L – 3 SEALS STANDARD SEALS – REVOLVING THREADED FLANGES UNI EN 1092-1

THREE-way ball valve three seals with “L” port
Drive: Inox lever
Connection: Revolving threaded flanges UNI EN 1092-1
Flow: Full and reduced
Material: Aisi 304L (1.4307) – Aisi 316L (1.4404)
Measure: from DN65 to DN100
Seals: Modified Virgin P.T.F.E.
Operating temperature: -20°C+170°C
Outer finish: Polished
On request:
Antistatic device ATEX:
II 2G Ex h IIC T4 Gb
II 2D Ex h IIIC T135°C Db
M.O.C.A. CE 1935/2004
• Seals made of:
PTFE with glass -20°C+170°C
PTFE with carbographite -20°C+180°C
PTFE with inox -20°C+200°C
UHMW High-molecular weight polyethylene -20°C+80°C

DIMENSIONS AND TECHNICAL DATA

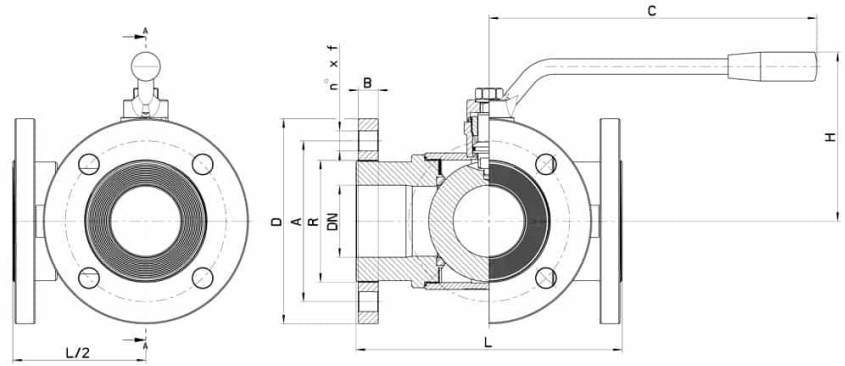

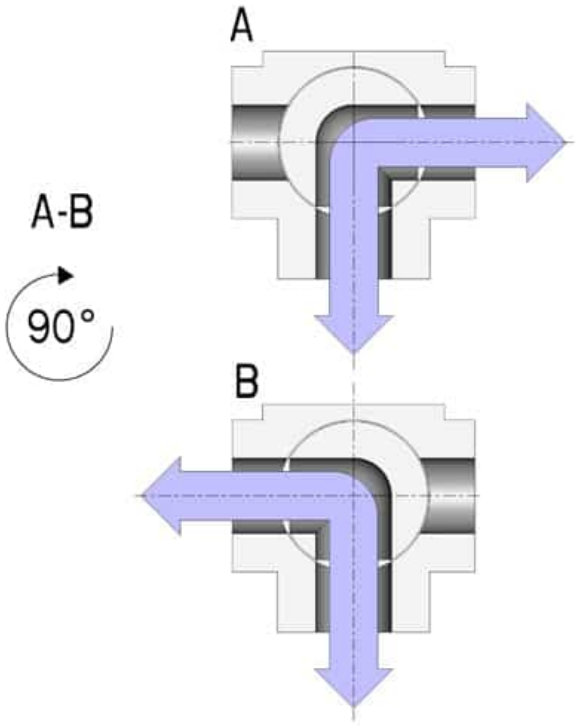

DN	DN	L	C	H	D	B	R	A	n° x F	PN	Kg	COD. AISI 304L	COD. AISI 316L
65	65	240	300	160	185	18	110	145	4x18	16	-	-	370150 64410
80	80	260	330	175	200	18	120	160	8x18	16	-	370150 44810	370150 64810
100	100	300	330	190	220	20	140	180	8x18	10	-	370150 45410	370150 65410
125	(Reduced) 100	325	330	190	250	22	153	210	8x18	10	-	370150 45510	370150 65510

COMPONENTS AND MATERIALS

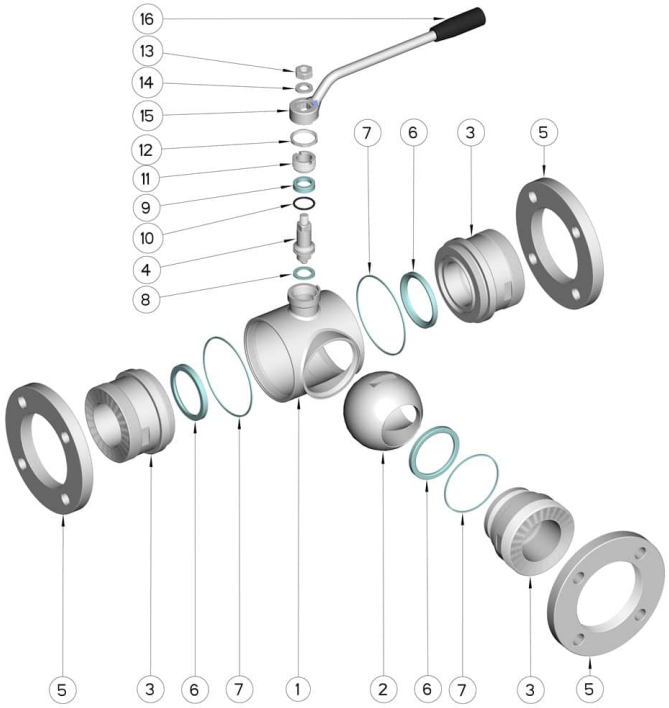

POS.	DENOMINATION	PCS	MAT.
1	Body	1	AISI 304L - 316L
2	Ball	1	AISI 304L - 316L
3	Sleeves	3	AISI 304L - 316L
4	Stem	1	AISI 304L - 316L
5	Flanges	3	AISI 304L - 316L
6	Ball Seals	3	PTFE Vergine Modificato
7	Sleeve Seals	3	PTFE
8	Stem Seal	1	PTFE
9	Stem Seal	1	PTFE
10	Stem or-Seal	1	FKM
11	Register ring	1	AISI 304L (303)
12	Locknut	1	AISI 304L
13	Nut	1	AISI 304L
14	Washer	1	AISI 304L
15	Lever	1	AISI 304L
16	Handle	1	Resin

DIAGRAMS

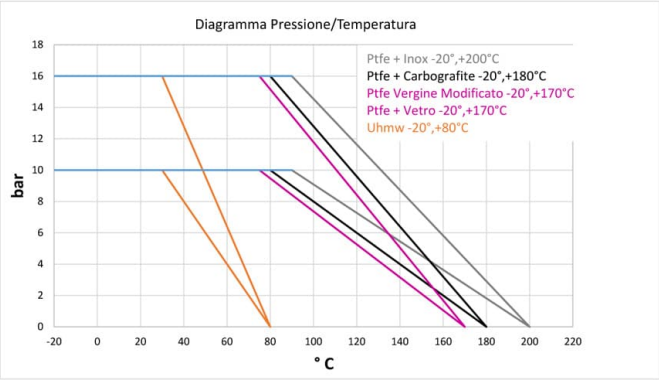
Diagramma Pressione/Temperatura
Ptfe + Inox -20°,+200°C
Ptfe + Carbografite -20°,+180°C
Ptfe Vergine Modificato -20°,+170°C
Ptfe + Vetro -20°,+170°C
Uhmw -20°,+80°C
bar
° C

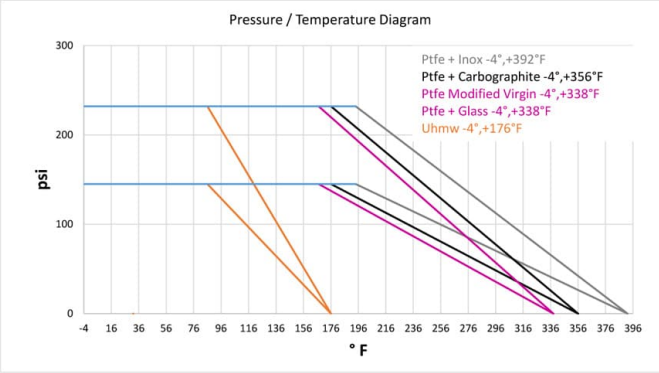
Pressure / Temperature Diagram
Ptfe + Inox -4°,+392°F
Ptfe + Carbographite -4°,+356°F
Ptfe Modified Virgin -4°,+338°F
Ptfe + Glass -4°,+338°F
Uhmw -4°,+176°F
psi
° F