

360130

T – 3 SEALS – FOR DIN PIPE

THREE-way ball valve three seals with “T” port
Drive: Inox lever
Connection: **CLAMP normative DIN 32676 TAB.2 REIHE A**
For TUBE according to normative DIN 11850
Flow: Full and reduced
Material: Aisi 316L (1.4404)
Measure: from DN65 to DN100
Seals: Modified Virgin P.T.F.E.
Operating temperature: -20°C+170°C
Outer finish: Polished
On request:
Antistatic device ATEX:
II 2G Ex h IIC T4 Gb
II 2D Ex h IIIC T135°C Db
M.O.C.A. CE 1935/2004
• Seals made of:
PTFE with glass -20°C+170°C
PTFE with carbographite -20°C+180°C
PTFE with inox -20°C+200°C
UHMW High-molecular weight polyethylene -20°C+80°C

DIMENSIONS AND TECHNICAL DATA

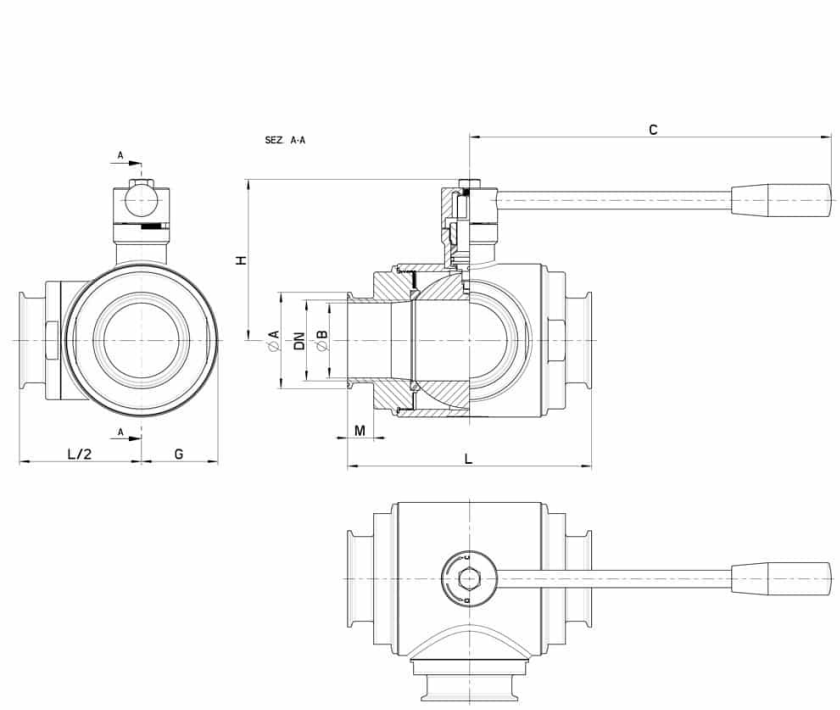

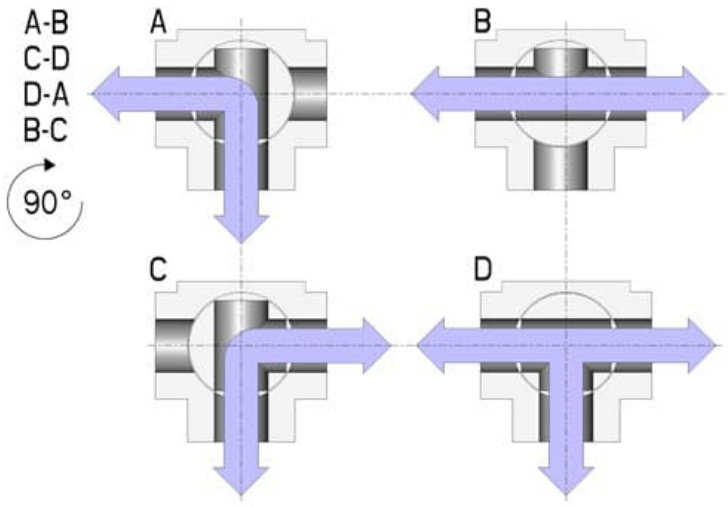

CLAMP REIHE A DN	L	G	Ø A	Ø B	C	H	PN	Kg	CODE AISI 316L
65	196	80	91	66	285	130	16	-	360130 64610
80	256	100	106	81	310	145	16	-	360130 64910
100	286	120	119	100	310	160	10	-	360130 65610

COMPONENTS AND MATERIALS

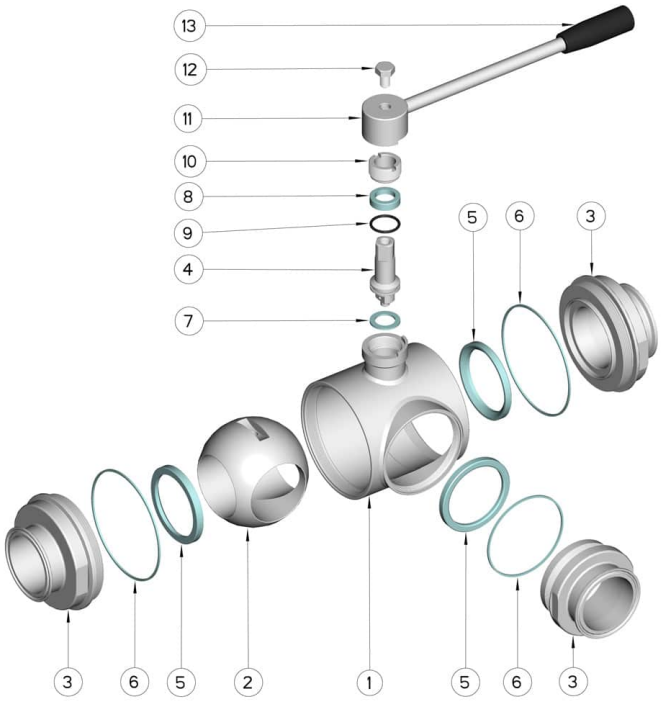

POS.	DENOMINATION	PCS	MAT.
1	Body	1	AISI 316L
2	Ball	1	AISI 316L
3	Sleeves	3	AISI 316L
4	Stem	1	AISI 316L
5	Ball Seals	3	PTFE Vergine Modificato
6	Sleeve Seals	3	NBR
7	Stem Seal	1	PTFE
8	Stem Seal	1	PTFE
9	Stem or-Seal	1	FKM
10	Register ring	1	AISI 304L (303)
11	Lever	1	AISI 304L
12	SCREW	1	AISI 304L
13	Handle	1	Resin

DIAGRAMS

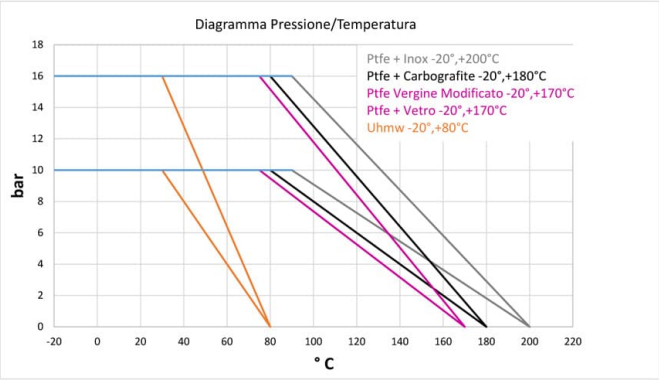
Diagramma Pressione/Temperatura
bar
° C
Ptfe + Inox -20°,+200°C
Ptfe + Carbografite -20°,+180°C
Ptfe Vergine Modificato -20°,+170°C
Ptfe + Vetro -20°,+170°C
Uhmw -20°,+80°C

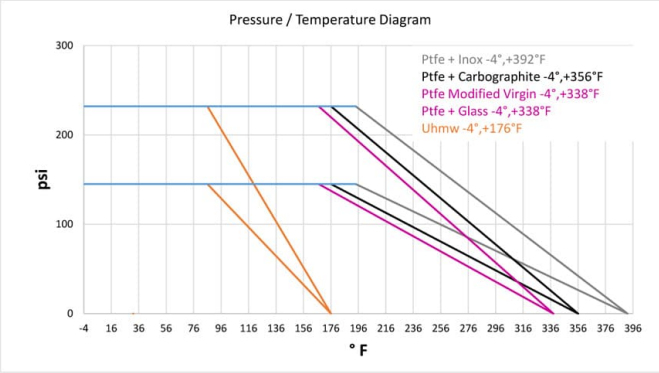
Pressure / Temperature Diagram
psi
° F
Ptfe + Inox -4°,+392°F
Ptfe + Carbographite -4°,+356°F
Ptfe Modified Virgin -4°,+338°F
Ptfe + Glass -4°,+338°F
Uhmw -4°,+176°F