

313055

L – STANDARD SEALS – REVOLVING THREADED FLANGES EN 1759-1 CLASS 150

THREE-way ball valve 4 seals with “L” port
Drive: ISO 5211 – DIN 3337 flange for actuator
Connection: Revolving threaded flanges EN 1759-1 CLASS 150 (exANSI 150)
Flow: Full
Material: Aisi 304L (1.4307) – Aisi 316L (1.4404)
Measure: from 1/2″ to 4″
Seals: Modified Virgin P.T.F.E.
Operating temperature: -20°C+170°C
Outer finish: Polished
On request:
Antistatic device ATEX:
II 2G Ex h IIC T4 Gb
II 2D Ex h IIIC T135°C Db
M.O.C.A. CE 1935/2004
• Seals made of:
PTFE with glass -20°C+170°C
PTFE with carbographite -20°C+180°C
PTFE with inox -20°C+200°C
UHMW High-molecular weight polyethylene -20°C+80°C

DIMENSIONS AND TECHNICAL DATA

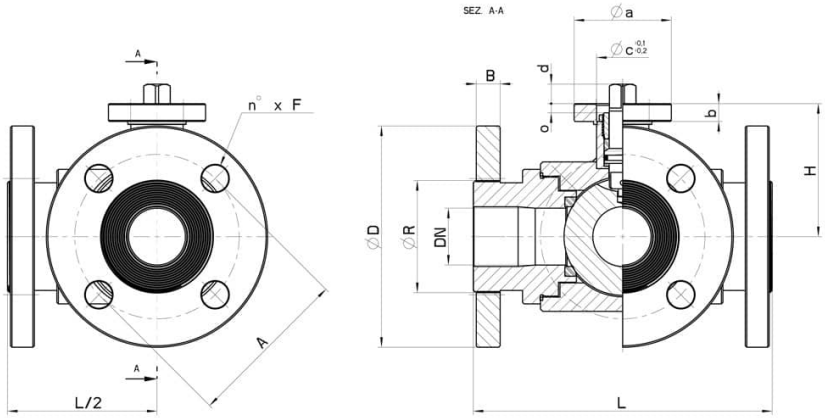

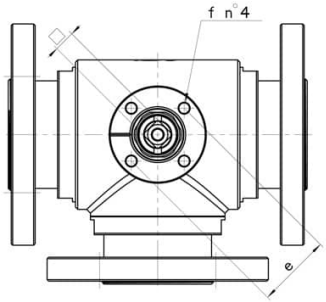

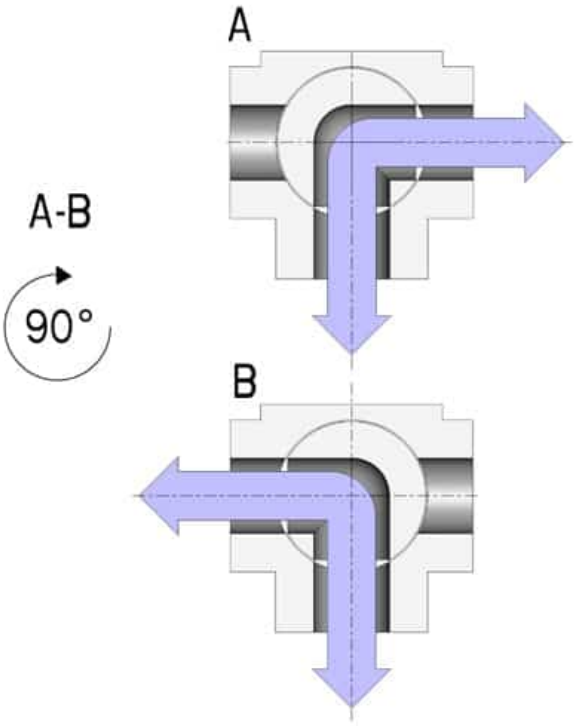

EN 1759-1 CLASS 150 (exANSI 150)	DN	L	H	D	B	R	A	n° x F	ISO-DIN	Ø a	b	Ø c x o	□	d	e	f	n° 4 BOLTS	N m	Kg	CODE AISI 304L	CODE AISI 316L
1/2"	15	130	49	88.9	10	34	60.6	4 x 16	F.03	46	9	25x3	9	8	36	6	M5x16	12	3,23	-	313055 61410
1/2"	15	130	49	88.9	10	34	60.6	4 x 16	F.04	54	9	30x3	11	10	42	6	M5x16	12	3,27	-	313055 6141F
3/4"	20	140	56,5	98.4	12.5	42	69.8	4 x 16	F.04	54	9	30x3	11	10	42	6	M5x16	23	4,78	-	313055 62010
3/4"	20	140	56,5	98.4	12.5	42	69.8	4 x 16	F.05	65	9	35x3	14	13	50	7	M6x16	23	4,83	-	313055 6201F
1"	25	150	61	108	13	51	79.4	4 x 16	F.04	54	9	30x3	11	10	42	6	M5x16	25	6,18	-	313055 62610
1"	25	150	61	108	13	51	79.4	4 x 16	F.05	65	9	35x3	14	13	50	7	M6x16	25	6,68	-	313055 6261F
1"1/4	32	180	81,5	117.5	14.5	63	88.9	4 x 16	F.05	65	9	35x4	14	13	50	7	M6x20	33	10,45	-	313055 63010
1"1/4	32	180	81,5	117.5	14.5	63	88.9	4 x 16	F.07	90	12	55x4	17	15	70	9	M8x20	33	10,52	-	313055 6301F
1"1/2	40	200	89	127	16	75	98.4	4 x 16	F.05	65	12	35x6	14	13	50	7	M6x20	40	13,85	-	313055 63410
1"1/2	40	200	89	127	16	75	98.4	4 x 16	F.07	90	12	55x4	17	15	70	9	M8x20	40	14,35	-	313055 6341F
2"	50	220	91,5	152.4	17.5	89	120.6	4 x 19	F.07	90	12	55x4	17	15	70	9	M8x20	50	18,40	-	313055 63810
2"	50	220	91,5	152.4	17.5	89	120.6	4 x 19	F.10	120	12	70x4	22	18	102	11	M10x25	50	18,90	-	313055 6381F
2"1/2 **	65	240	101,5	178	21	110	139.7	4 x 18	F.07	90	12	55x4	17	15	70	9	M8x20	60	23,42	-	313055 64410
2"1/2 **	65	240	101,5	178	21	110	139.7	4 x 19	F.10	120	12	70x4	22	18	102	11	M10x25	60	23,92	-	313055 6441F
3" **	80	260	116	190	22	120	152.4	4 x 19	F.07	90	12	55x4	17	15	70	9	M8x20	110	34,26	313055 44810	313055 64810
3"**	80	260	116	190	22	120	152.4	4 x 19	F.10	120	12	70x4	22	18	102	11	M10x25	110	34,76	313055 4481F	313055 6481F

EN 1759-1 CLASS 150 (exANSI 150)	DN	L	H	D	B	R	A	n° x F	ISO-DIN	Ø a	b	Ø c x o	□	d	e	f	n° 4 BOLTS	N m	Kg	CODE AISI 304L	CODE AISI 316L
4" **	100	300	131	229	22	140	190.5	8 x 19	F.07	90	12	55x4	17	15	70	9	M8x20	130	49,50	313055 45410	313055 65410
4" **	100	300	131	229	22	140	190.5	8 x 19	F.10	120	12	70x4	22	18	102	11	M10x25	130	50,00	313055 4541F	313055 6541F

COMPONENTS AND MATERIALS

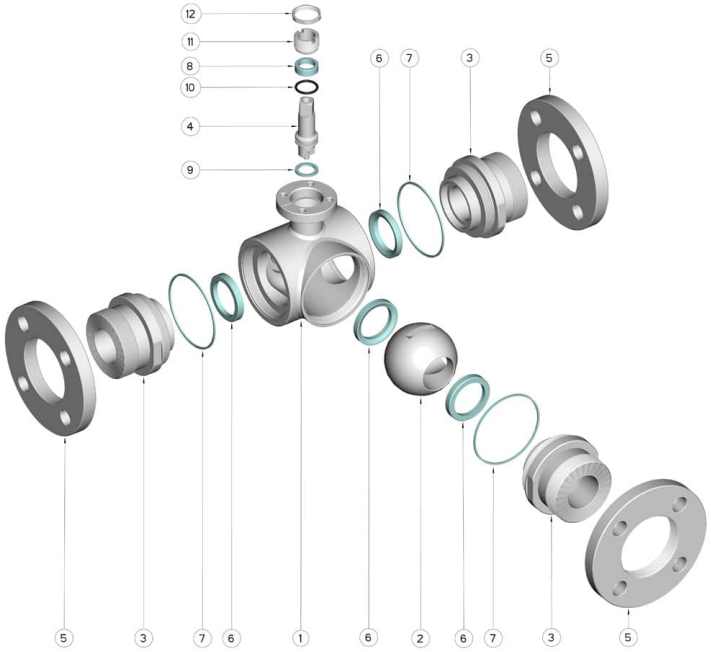

POS.	DENOMINATION	PCS	MAT.
1	Body	1	AISI 304L - 316L
2	Ball	1	AISI 304L - 316L
3	Sleeves	3	AISI 304L - 316L
4	Stem	1	AISI 304L - 316L
5	Flanges	3	AISI 304L - 316L
6	Ball Seals	4	PTFE Vergine Modificato
7	Sleeve Seals	3	PTFE
8	Stem Seal	1	PTFE
9	Stem Seal	1	PTFE
10	Stem or-Seal	1	FKM
11	Register ring	1	AISI 304L (303)
12	Locknut	1	AISI 303