

310127

L – 4 SEALS Standard Seals – M DIN 11851

THREE-way ball valve 4 seals with “L” port
Drive: Inox lever
Connection: DIN 11851 male/male/male
Flow: Full
Material: Aisi 304L (1.4307) – Aisi 316L (1.4404)
Measure: from DN10 to DN100
Seals: Modified Virgin P.T.F.E.
Operating temperature: -20°C+170°C
Outer finish: Polished
On request:
Antistatic device ATEX:
II 2G Ex h IIC T4 Gb
II 2D Ex h IIIC T135°C Db
M.O.C.A. CE 1935/2004
• Seals made of:
PTFE with glass -20°C+170°C
PTFE with carbographite -20°C+180°C
PTFE with inox -20°C+200°C
UHMW High-molecular weight polyethylene -20°C+80°C

DIMENSIONS AND TECHNICAL DATA

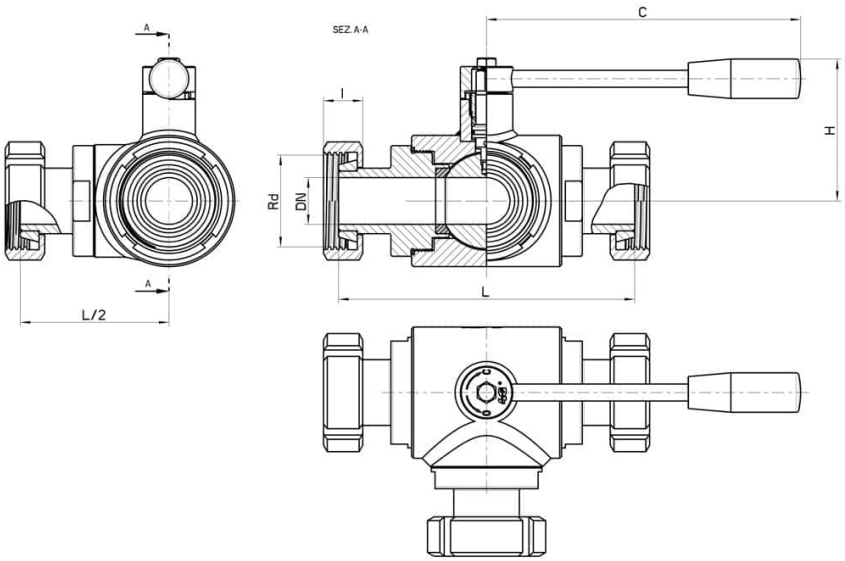

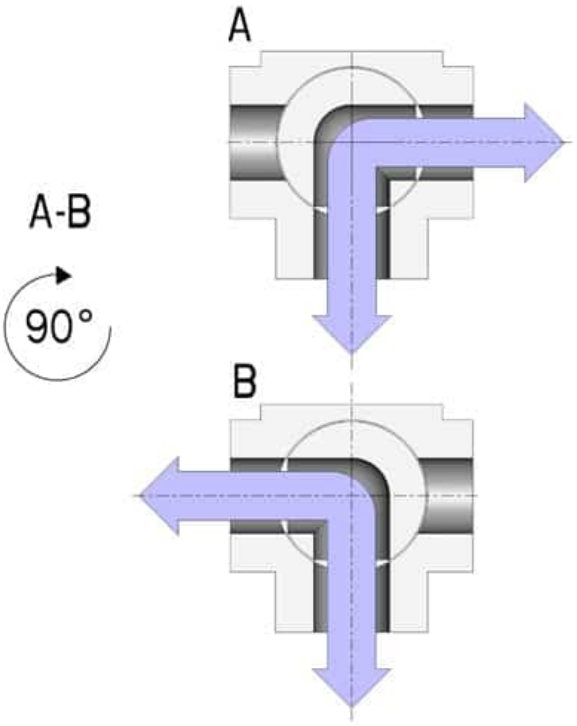

DN	Rd	L	I	C	H	PN	Kg	CODE AISI 304L	CODE AISI 316L
10	28 x 1/8"	116	18	110	60	100	-	-	310127 60810
15	34 x 1/8"	126	18	110	65	100	-	-	310127 61410
20	44 x 1/6"	144	21	160	70	100	-	-	310127 62010
25	52 x 1/6"	158	21	160	80	64	-	-	310127 62610
32	58 x 1/6"	174	21	190	95	64	-	-	310127 63010
40	65 x 1/6"	190	21	190	110	64	-	-	310127 63410
50	78 x 1/6"	202	22	220	120	40	-	-	310127 63810
65	95 x 1/6"	214	25	285	130	40	-	-	310127 64410
80	110 x 1/4"	266	30	310	145	40	-	310127 44810	310127 64810
100	130 x 1/4"	302	31	310	160	16	-	310127 45410	310127 65410

COMPONENTS AND MATERIALS

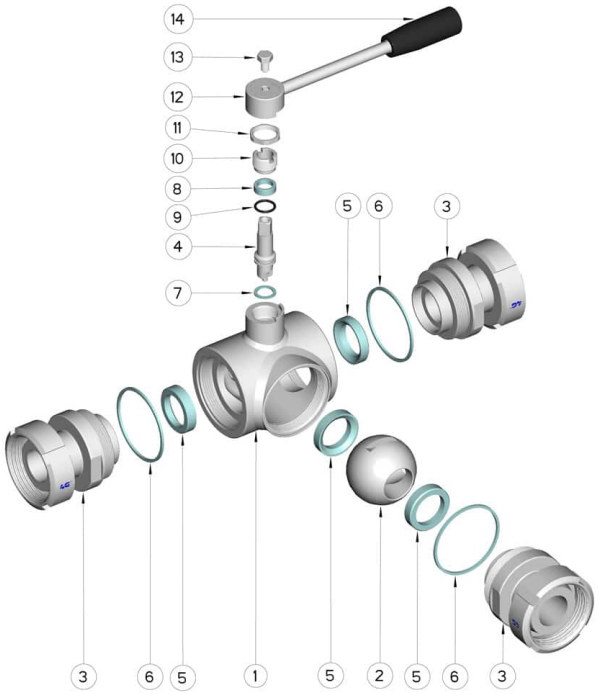

os.	DENOMINATION	PCS	MAT.
1	Body	1	AISI 304L - 316L
2	Ball	1	AISI 304L - 316L
3	Sleeves	3	AISI 304L - 316L
4	Stem	1	AISI 304L - 316L
5	Ball Seals	4	PTFE Vergine Modificato
6	Sleeve Seals	3	PTFE
7	Stem Seal	1	PTFE
8	Stem Seal	1	PTFE
9	Stem or-Seal	1	FKM
10	Register ring	1	AISI 304L (303)
11	Nut	1	AISI 304L
12	Lever	1	AISI 304L
13	SCREW	1	AISI 304L
14	Handle	1	DUROPLAST (PF)

DIAGRAMS

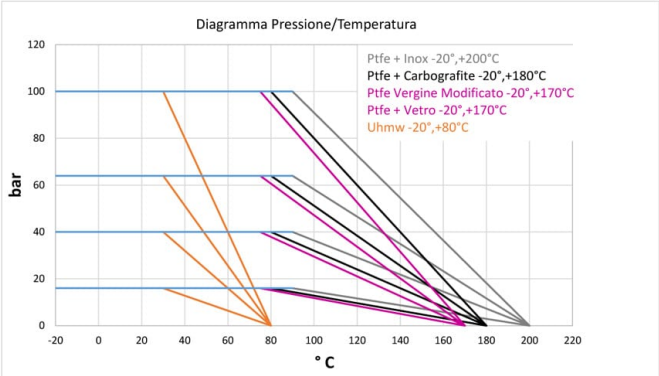
Diagramma Pressione/Temperatura
Ptfe + Inox -20°,+200°C
Ptfe + Carbografite -20°,+180°C
Ptfe Vergine Modificato -20°,+170°C
Ptfe + Vetro -20°,+170°C
Uhmw -20°,+80°C
bar
120
100
80
60
40
20
0
-20 0 20 40 60 80 100 120 140 160 180 200 220
° C

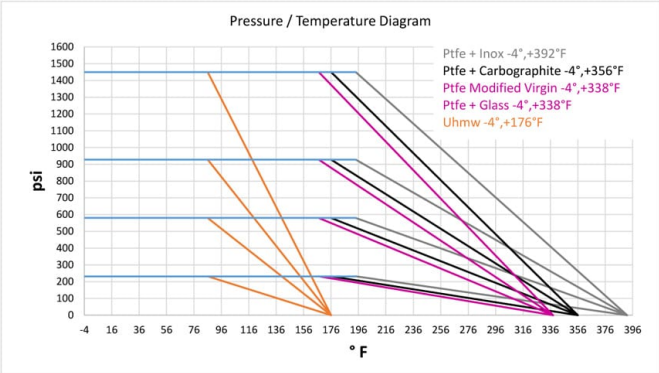
Pressure / Temperature Diagram
Ptfe + Inox -4°,+392°F
Ptfe + Carbographite -4°,+356°F
Ptfe Modified Virgin -4°,+338°F
Ptfe + Glass -4°,+338°F
Uhmw -4°,+176°F
psi
1600
1500
1400
1300
1200
1100
1000
900
800
700
600
500
400
300
200
100
0
-4 16 36 56 76 96 116 136 156 176 196 216 236 256 276 296 316 336 356 376 396
° F