

403055

STANDARD SEALS – CLASS 150

TWO-way ball valve, Flat Body
Drive: ISO 5211 flange for actuator
Connection: Threaded holes for EN 1759-1 CLASS 150 (exANSI 150)
Flow: Full
Material: Aisi 316L (1.4404)
Measure: from DN15 to DN100
Seals: Modified Virgin P.T.F.E.
Operating temperature: -20°C+170°C
* MOUNTING KIT NEEDED Art. 747540
On request:
Antistatic device ATEX:
II 2G Ex h IIC T4 Gb
II 2D Ex h IIIC T135°C Db
M.O.C.A. CE 1935/2004
• Seals made of:
PTFE with glass -20°C+170°C
PTFE with carbographite -20°C+180°C
PTFE with inox -20°C+200°C
UHMW High-molecular weight polyethylene -20°C+80°C

DIMENSIONS AND TECHNICAL DATA

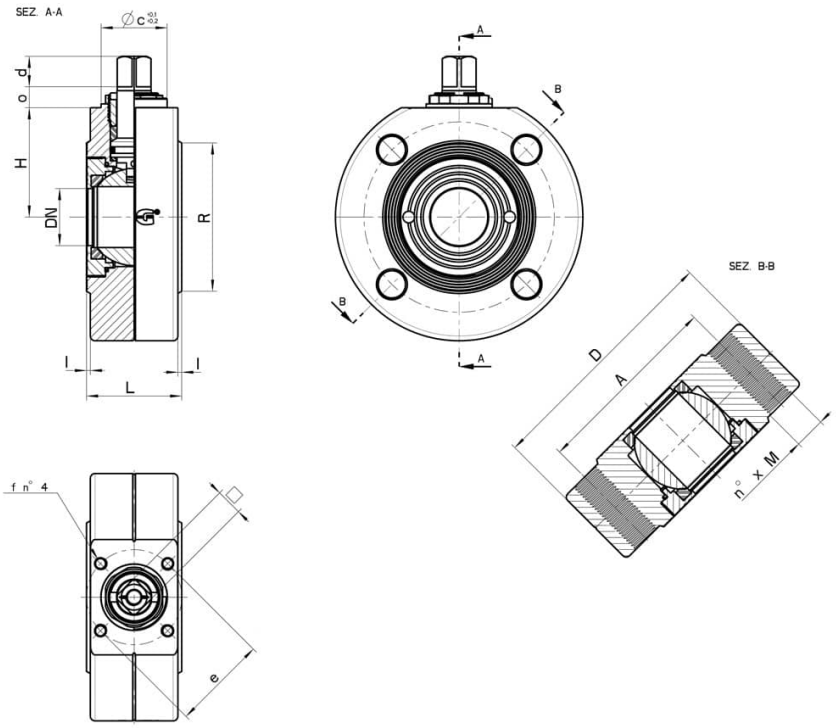

EN 1759-1 CLASS 150 (exANSI 150)	DN	L	H	D	I	R	A	n° x M	Kg	ISO-DIN	d	o	□	e	f	Nm	COD. AISI 316L
1/2"	15	35	32,5	90	1,5	35	60,6	4xM12	-	F.03	10		9	36	M.5	8	403055 61410
3/4"	20	38	40	100	1,5	43	69,8	4xM12	-	F.04	11		11	42	M.5	12	403055 62010
1"	25	42	42,5	105	2	51	79,4	4xM12	-	F.04	11		11	42	M.5	15	403055 62610
1"1/4	32	54	57,5	130	2	63,5	88,9	4xM12	-	F.05	16		14	50	M.6	18	403055 63010
1"1/2	40	66	62	140	3	73	98,4	4xM12	-	F.05	16		14	50	M.6	25	403055 63410
2"	50	82	70	150	3	92	120,6	4xM16	-	F.05	16		14	50	M.6	30	403055 63810
2"1/2	65	95	80,5	180	3	119	139,7	4xM16	-	F.07	18		17	70	M.8	45	403055 64410
3"	80	118	92	200	3	127	152,4	4xM16	-	F.07	18		17	70	M.8	85	403055 64810
4"	100	140	101	220	3	157	190,5	8xM16	-	F.10			17	102	M.10	90	403055 65410

* MOUNTING KIT NEEDED Art. 747540 or LEVER Art. 9354112

COMPONENTS AND MATERIALS

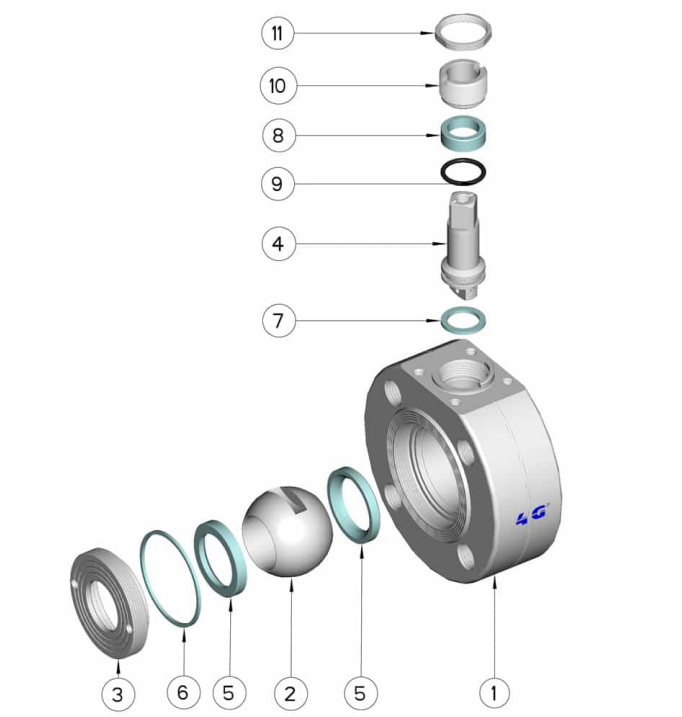

POS.	DENOMINATION	PCS	MAT.
1	Body	1	AISI 304L - AISI 316L
2	Ball	1	AISI 304L - AISI 316L
3	Ring nut	1	AISI 304L - AISI 316L
4	Stem	1	AISI 304L - AISI 316L
5	Ball Seals	2	PTFE Vergine Modificato
6	Ring Seal	1	PTFE
7	Stem Seal	1	PTFE
8	Stem Seal	1	PTFE
9	Stem or-Seal	1	FKM
10	Register ring	1	AISI 304L (303)
11	Locknut		AISI 303