153030E_HEATING JACKET_STANDARD SEALS_TANK SIDE FLANGE FIXED UNI EN 1092 AND CLAMP DIN32676 TAB.4 REIHE C ON OUTPUT SIDE

TWO-way ball valve STEM BENT BOTTOM with “STANDARD SEAL” with HEATING JACKET
Use: Valve for tank bottom
Antistatic device ATEX:
II 2G Ex h IIC T4 Gb
II 2D Ex h IIIC T135°C Db
Drive: ISO 5211 – DIN 3337 flange for actuator
Connections: Tank side flange fixed UNI EN 1092 and CLAMP DIN 32676 Tab.4 Reihe C on output side
Flow: Full
Material: Aisi 316L (1.4404)
Measure: from DN40 to DN120
Seals: Modified Virgin P.T.F.E.
Operating temperature: -20°C+170°C
Outer finish: Polished
Screws for mounting actuator included

On request:
M.O.C.A. CE 1935/2004
• Seals made of:
PTFE with inox -20°C+200°C
• MANUAL with LEVER Kit
• Counterflanges for Tank

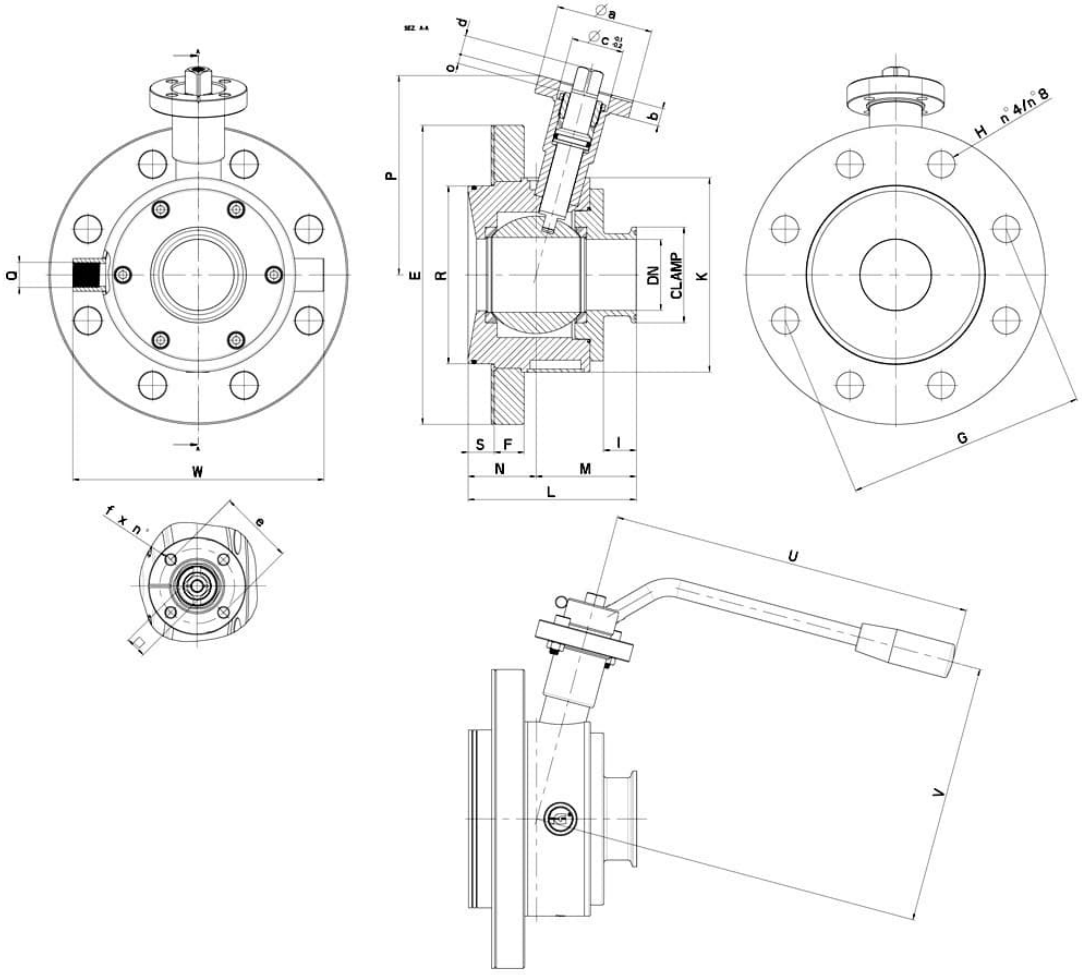
Q
W
P
E
R
DN
CLAMP
K
S
F
N
M
L
I
H
n°4/n°8
G
U
V
f x n°
e

CLAMP	DN-DIN 11851	L	PN	N	M	S	F	I	Ø E (Flangia-DN)	Ø R	Ø G	Ø H x n°	K	Q (connessione camicia ISO 228 F)	W	Nm	Kg	CODE AISI 316L
1"1/2	40	108	16	45	63	17	20	22	185 (DN65)	94	145	18 x 4	115	3/8"	154	32	7,80	153030E63410
2"	50	112,5	16	45,5	67	17,5	20	22	200 (DN80)	119	160	18 x 8	130	3/8"	168	37	9,45	153030E63810
2"1/2	65	138	16	57	81	19,5	22	25	220 (DN100)	138	180	18 x 8	150	1/2"	188	60	14,57	153030E64410
3"	80	164	16	73	91	27,5	22	30	250 (DN125)	165	210	18 x 8	180	1/2"	218	75	21,30	153030E64810
4"	100	174	16	77	97	26,5	24	33	285 (DN150)	190	240	22 x 8	200	1/2"	238	85	28,27	153030E65410
6"	125	225	10	100	125	30	26	35,5	340 (DN200)	215	295	22 x 8	240	1/2"	279	130	49,70	153030E65910

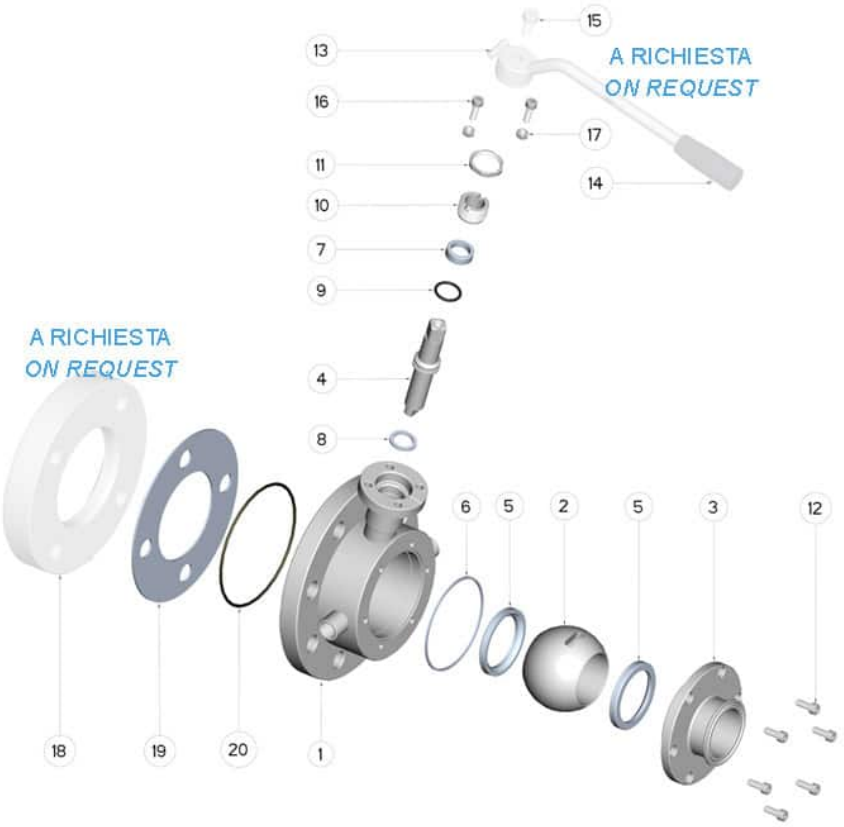

POS.	DENOMINATION	PCS	MAT.
1	Body	1	AISI 316L
2	Ball	1	AISI 316L
3	Sleeve	1	AISI 316L
4	Stem	1	AISI 316L
5	Ball Seals	2	PTFE
6	Sleeve Seal	1	PTFE
7	Stem Seal	1	PTFE
8	Stem Seal	1	PTFE
9	Stem sealing O-Ring	1	FKM (a richiesta EPDM)
10	Register ring	1	AISI 304L (303)
11	Locknut	1	AISI 303
12	Sleeve screw	6	AISI 304L
13	Lever	1	AISI 304L
14	Handle	1	DUROPLAST (PF)
15	Lever screw	1	AISI 304L
16	Stop lever screw	2	AISI 304L
17	Stop lever bolts	2	AISI 304L
18	Counterflange	1	AISI 316L
19	Flanges Seal	1	PTFE
20	Counterflange O-Ring	1	FKM (a richiesta EPDM)

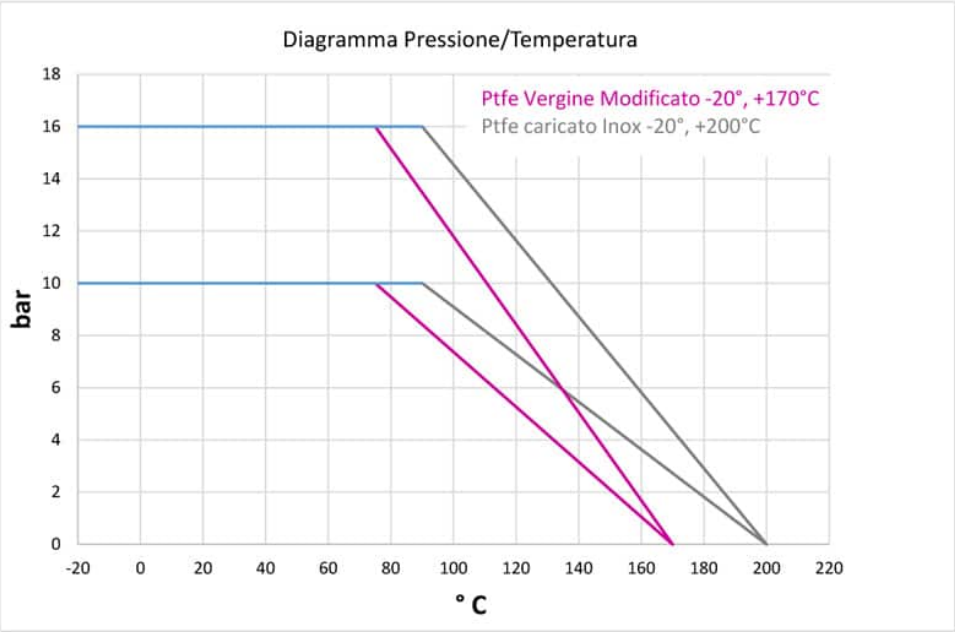
Diagramma Pressione/Temperatura
Ptfe Vergine Modificato -20°, +170°C
Ptfe caricato Inox -20°, +200°C
bar
18
16
14
12
10
8
6
4
2
0
-20
0
20
40
60
80
100
120
140
160
180
200
220
° C

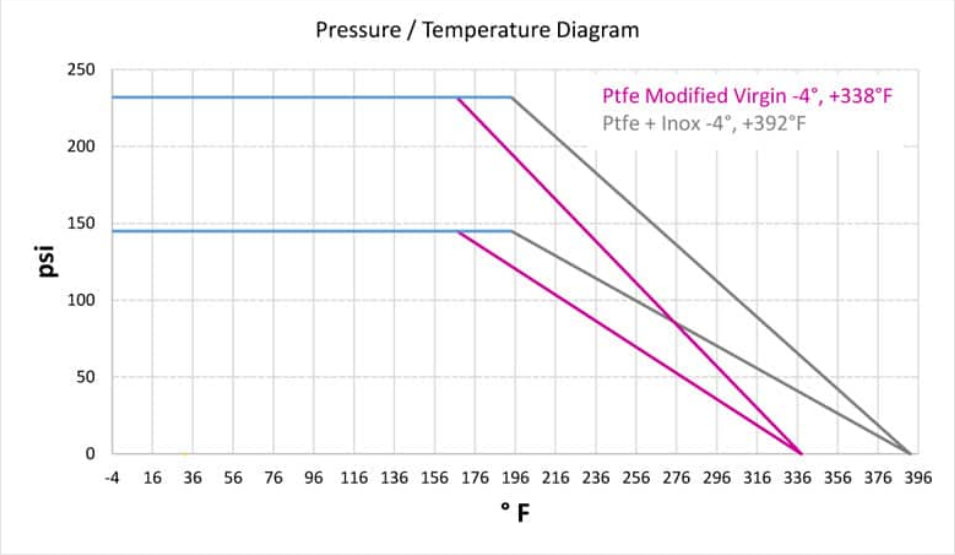
Pressure / Temperature Diagram
Ptfe Modified Virgin -4°, +338°F
Ptfe + Inox -4°, +392°F
psi
250
200
150
100
50
0
-4
16
36
56
76
96
116
136
156
176
196
216
236
256
276
296
316
336
356
376
396
° F