

153025E

HEATING JACKET – STANDARD SEALS – TANK SIDE FLANGE FIXED UNI EN 1092 AND DIN 11851 FEMALE ON OUTPUT SIDE

TWO-way ball valve STEM BENT BOTTOM with “STANDARD SEAL” with HEATING JACKET
Use: Valve for tank bottom
Antistatic device ATEX:
II 2G Ex h IIC T4 Gb
II 2D Ex h IIIC T135°C Db
Drive: ISO 5211 – DIN 3337 flange for actuator
Connections: Tank side flange fixed UNI EN 1092 and DIN 11851 on output side
Flow: Full
Material: Aisi 316L (1.4404)
Measure: from DN40 to DN125
Seals: Modified Virgin P.T.F.E.
Operating temperature: -20°C+170°C
Outer finish: Polished
Screws for mounting actuator included
On request:
M.O.C.A. CE 1935/2004
• Seals made of:
PTFE with inox -20°C+200°C
• MANUAL with LEVER Kit
• Counterflanges for Tank

DIMENSIONS AND TECHNICAL DATA

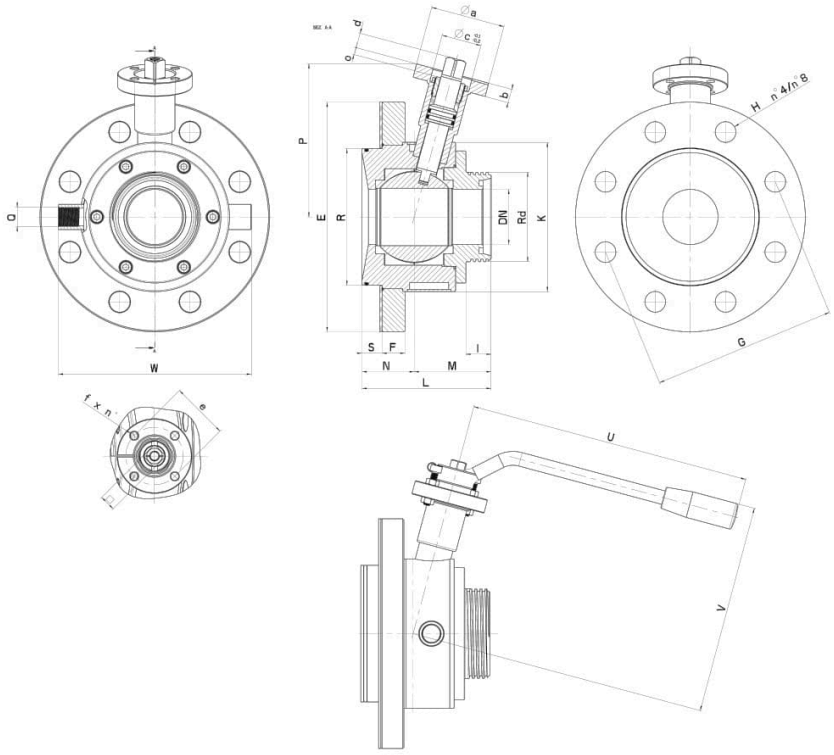

Rd	DN-DIN 11851	L	P N	N	M	S	F	I	Ø E (Flangia-DN)	Ø R	Ø G	Ø H x n°	K	P	ISO 5211	□	Ø a	b	Ø e	Ø c x o	d	Ø f x n°	U	V	Q (connessione camicia ISO 228 F)	W	N m	Kg	CODE AISI 316L
65 x 1/6"	40	108	16	45	63	17	20	22	185 (DN65)	94	145	18 x 4	115	127	F05	14	65	12	50	35 x 6	13	7 x 4	245	176	3/8"	154	32	7,96	153025E63410
78 x 1/6"	50	112,5	16	45,5	67	17,5	20	22	200 (DN80)	119	160	18 x 8	130	133	F05	14	65	12	50	35 x 6	13	7 x 4	245	182	3/8"	168	37	9,65	153025E63810
95 x 1/6"	65	138	16	57	81	19,5	22	25	220 (DN100)	138	180	18 x 8	150	157	F07	17	90	12	70	55 x 7	15	9 x 4	270	215	1/2"	188	60	14,89	153025E64410
110 x 1/4"	80	164	16	73	91	27,5	22	30	250 (DN125)	165	210	18 x 8	180	168	F07	17	90	12	70	55 x 7	15	9 x 4	300	227	1/2"	218	75	21,83	153025E64810
130 x 1/4"	100	174	16	77	97	26,5	24	33	285 (DN150)	190	240	22 x 8	200	180	F07	17	90	12	70	55 x 5	17	9 x 4	325	245	1/2"	238	85	28,80	153025E65410
160 x 1/4"	125	225	10	100	125	30	26	35,5	340 (DN200)	215	295	22 x 8	240	205	F10	22	120	12	102	70 x 5	19	11 x 4	481	287	1/2"	279	130	50,60	153025E65810

COMPONENTS AND MATERIALS

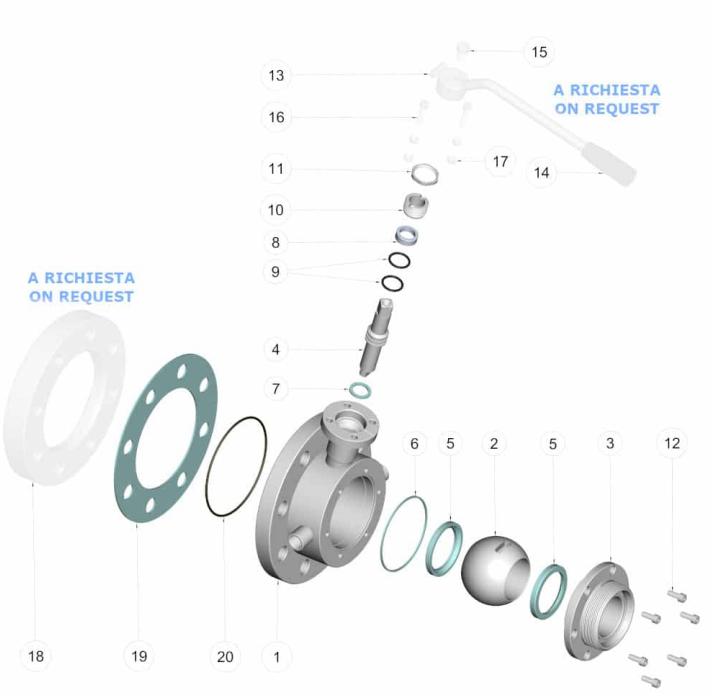

POS.	DENOMINATION	PCS	MAT.
1	Body	1	AISI 316L
2	Ball	1	AISI 316L
3	Sleeve	1	AISI 316L
4	Stem	1	AISI 316L
5	Ball Seals	2	PTFE
6	Sleeve Seal	1	PTFE
7	Stem Seal	1	PTFE
8	Stem Seal	1	PTFE
9	O-Ring di tenuta perno	2	FKM (a richiesta EPDM)
10	Register ring	1	AISI 304L (303)
11	Locknut	1	AISI 303
12	Sleeve screw	6	AISI 304L
13	Lever	1	AISI 304L
14	Handle	1	DUROPLAST (PF)
15	Lever screw	1	AISI 304L
16	Stop lever screw	2	AISI 304L
17	Stop lever bolts	4	AISI 304L
18	Counterflange	1	AISI 316L
19	Flanges Seal	1	PTFE
20	O-Ring Controflangia	1	FKM (a richiesta EPDM)

DIAGRAMS

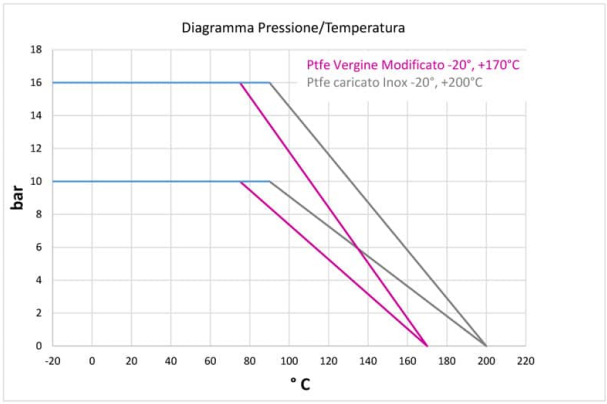
Diagramma Pressione/Temperatura
Ptfe Vergine Modificato -20°, +170°C
Ptfe caricato Inox -20°, +200°C
bar
0
2
4
6
8
10
12
14
16
18
-20
0
20
40
60
80
100
120
140
160
180
200
220
° C

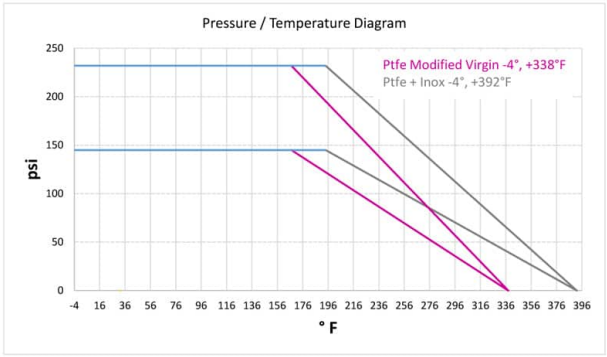
Pressure / Temperature Diagram
Ptfe Modified Virgin -4°, +338°F
Ptfe + Inox -4°, +392°F
psi
0
50
100
150
200
250
-4
16
36
56
76
96
116
136
156
176
196
216
236
256
276
296
316
336
356
376
396
° F