

113030

FOR BS TUBE

TWO-way ball valve
Drive: ISO 5211 – DIN 3337 flange for actuator
Connection: **CLAMP normative DIN 32676 TAB.4 REIHE C**
For TUBE according to normative BS/OD (ASTM A270)
Flow: Full and reduced
Material: Aisi 316L (1.4404)
Measure: from 1/2” to 6”
Seals: Modified Virgin P.T.F.E.
Operating temperature: -20°C+170°C
Outer finish: Polished
Screws for mounting actuator included
Antistatic device ATEX::
II 2G Ex h IIC T4 Gb
II 2D Ex h IIIC T135°C Db
On request:
Antistatic device ATEX:
• Seals made of:
PTFE with glass -20°C+170°C
PTFE with carbographite -20°C+180°C
PTFE with inox -20°C+200°C
UHMW High-molecular weight polyethylene -20°C+80°C

DIMENSIONS AND TECHNICAL DATA

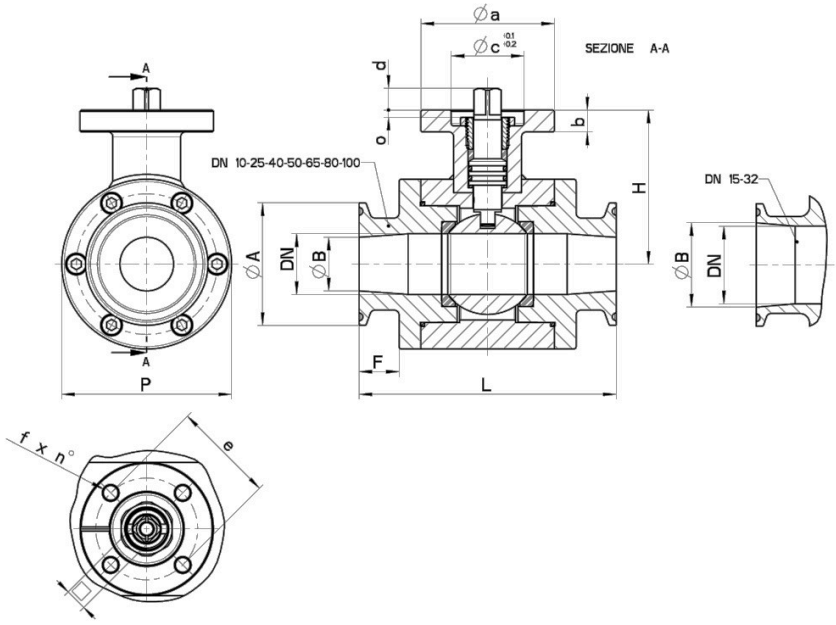

CLAMP REIHE C	DN	L	Ø A	Ø B	F	H	Ø P	PN	Kg	ISO-DIN	Ø a	b	Ø c x o	□	d	e	f x n°4	Bolts	Nm *	CODE AISI 316L
1/2"	10	88	25	9.4	16	48.5	48	100	0,90	F03	45	9	25 x 3	9	8	36	6	M5x16	5	113030A61210
3/4"	15	92	25	15.75	16.5	51.5	52	100	1,02	F03	45	9	25 x 3	9	8	36	6	M5x16	8	113030A61810
1"	25	106	50.5	22.1	16.5	63.5	70	64	2,25	F04	55	9	30 x 3	11	10	42	6	M5x16	15	113030A62610
1"1/2	32	112	50.5	34.8	22	90.5	85	64	3,05	F05	65	12	35 x 6	14	13	50	7	M6x20	18	113030A63210
1"1/2	40	126	50.5	34.8	22	95	100	64	4.56	F05	65	12	35 x 6	14	13	50	7	M6x20	25	113030A63410
2"	50	134	64	47.5	22	102.5	115	40	6.00	F05	65	12	35 x 6	14	13	50	7	M6x20	30	113030A63810
2"1/2	65	162	77.5	60.2	25	116	140	40	10.86	F07	90	12	55 x 7	17	15	70	9	M8x20	45	113030A64410
3"	80	182	91	72.9	30	127.5	155	40	13.03	F07	90	12	55 x 7	17	15	70	9	M8x20	70	113030A64810
4"	100	194	119	97.38	33	141.5	185	25	18.97	F07	90	12	55 x 5	17	16	70	9	M8x20	80	113030A65410
6"	120	250	167	146,86	37,5	154	222	16	36.77	F.10-F.12	150	14	85 x 4.5	22-27	19	102-125	11-13	M10x25-M12x30	130	113030A65910

COMPONENTS AND MATERIALS

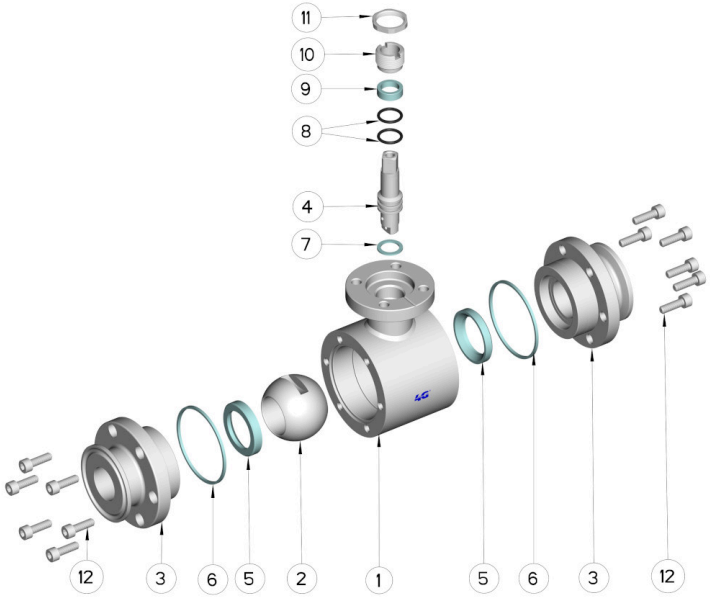

POS.	DENOMINATION	PCS	MAT.
1	Body	1	AISI 304L - 316L
2	Ball	1	AISI 304L - 316L
3	Sleeves	2	AISI 304L - 316L
4	Stem	1	AISI 304L - 316L
5	Ball Seals	2	PTFE Vergine Modificato
6	Sleeve Seals	2	PTFE
7	Stem Seal	1	PTFE
8	Stem or-Seal	2	FKM
9	Stem Seal	1	PTFE
10	Register ring	1	AISI 304L (303)
11	Locknut	1	AISI 304L
12	Sleeve screw	da 6 a 20	AISI 304L

DIAGRAMS

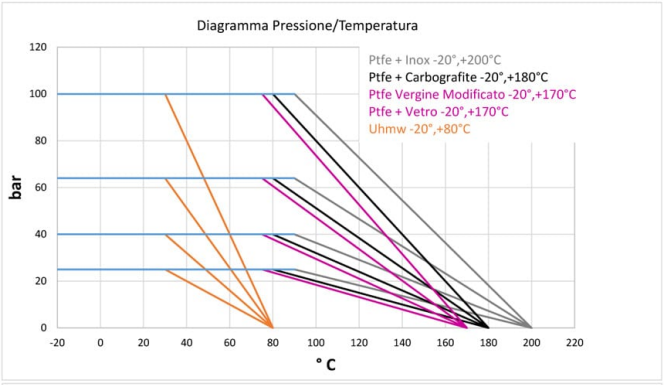
Diagramma Pressione/Temperatura
Ptfe + Inox -20°,+200°C
Ptfe + Carbografite -20°,+180°C
Ptfe Vergine Modificato -20°,+170°C
Ptfe + Vetro -20°,+170°C
Uhmw -20°,+80°C
bar
120
100
80
60
40
20
0
-20 0 20 40 60 80 100 120 140 160 180 200 220
° C

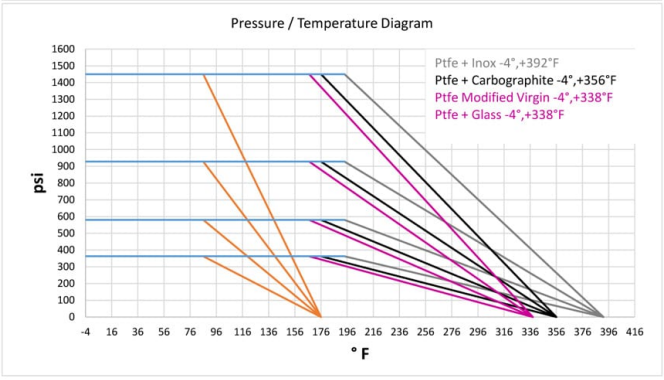
Pressure / Temperature Diagram
Ptfe + Inox -4°,+392°F
Ptfe + Carbographite -4°,+356°F
Ptfe Modified Virgin -4°,+338°F
Ptfe + Glass -4°,+338°F
psi
1600
1500
1400
1300
1200
1100
1000
900
800
700
600
500
400
300
200
100
0
-4 16 36 56 76 96 116 136 156 176 196 216 236 256 276 296 316 336 356 376 396 416
° F